FEMALE END VIEW

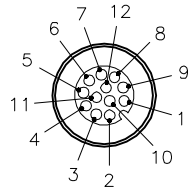

BOARD LAYOUT

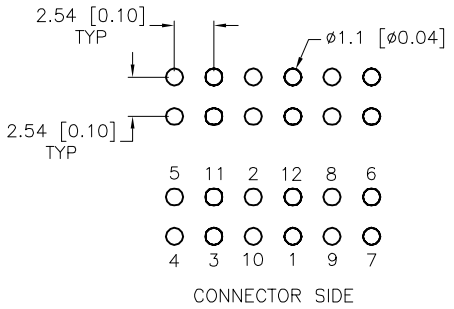

TYPICAL PANEL CUTOUT

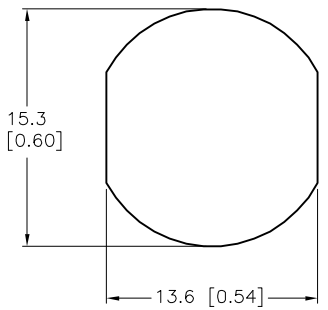

SPECIFICATIONS

CONTACT CARRIER MATERIAL/COLOR	NYLON OR TPU
CONTACT MATERIAL/PLATING	BRASS/GOLD
HOUSING MATERIAL/FINISH	STAINLESS STEEL/PASSIVATED
LOCKNUT MATERIAL/FINISH	STAINLESS STEEL/PASSIVATED
RATED CURRENT [A]	2.0 A
RATED VOLTAGE [V]	30 V
TERMINAL PIN MATERIAL/PLATING	PHOSPHOR BRONZE/GOLD
TEMPERATURE RATING	−40°C to +90°C (−40°F to +194°F)
PROTECTION CLASS	MEETS NEMA 1,3,4,6,13 AND IEC IP67
MAX. PANEL THICKNESS	3.0 [0.12]

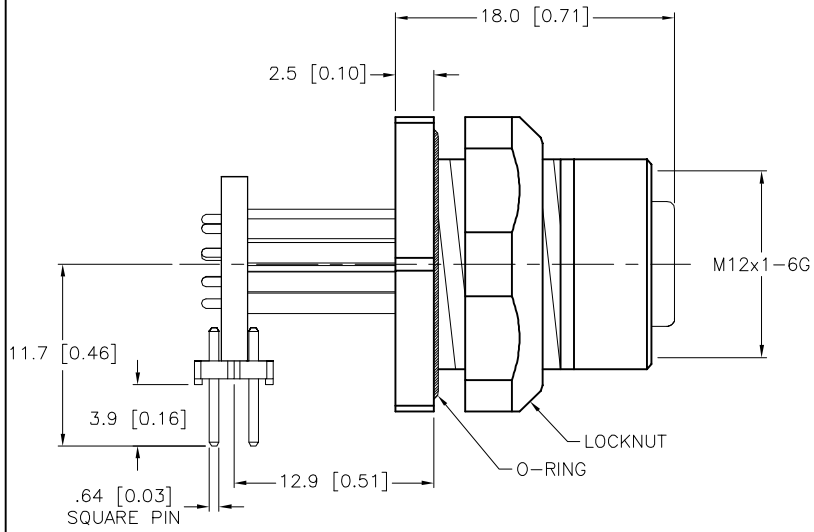

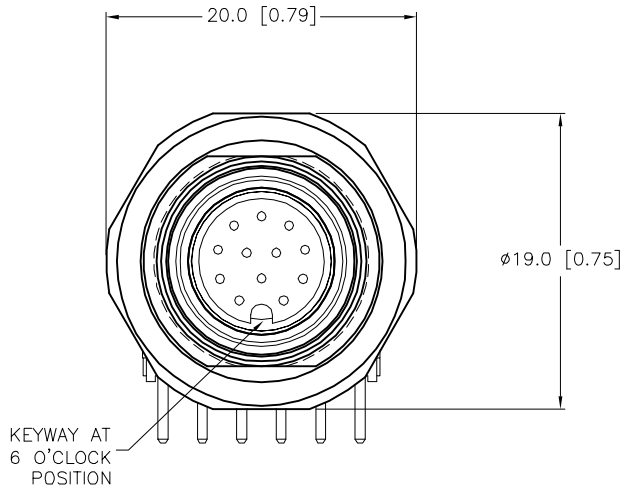

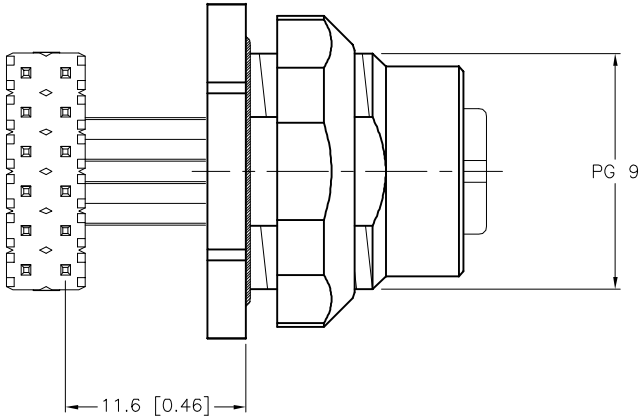

SOURCE DRAWING - FOR REFERENCE ONLY

REV	DESCRIPTION	BY	DATE	ECO NO.
C	UPDATE VOLTAGE RATING	CBM	02/21/23	78300

RELATED DOCUMENTS
1.
2.
3.
4.

3RD ANGLE PROJECTION

THIS DRAWING IS CONFIDENTIAL AND THE PROPERTY OF TURCK INC. USE OF THIS DOCUMENT WITHOUT WRITTEN PERMISSION IS PROHIBITED.

TURCK

3000 CAMPUS DRIVE
MINNEAPOLIS, MN 55441
1−800−544−7769
(763) 553−7300
(763) 553−0708 fax
www.turck.us

MATERIAL: SEE SPECIFICATIONS

FINISH: SEE SPECIFICATIONS

ALL DIMENSIONS DISPLAYED ON THIS DRAWING ARE FOR REFERENCE ONLY

CONTACT TURCK FOR MORE INFORMATION

DRFT: TV | DATE: 06/26/15
APVD: C.K. | SCALE: 1=.5

UNIT OF MEASUREMENT
MILLIMETER [INCH]
DO NOT SCALE THIS DRAWING

DESCRIPTION: WFKDV 12−PCBH

IDENTIFICATION NO.: U2−25113 | REV: C

FILE: U2−25113 | SHEET 1 OF 1